FUEL SYSTEM, EVAP - Z26S4D92AN/AH/BN/BH (C750260)

2026 RZR - RZR PRO S4 ULTIMATE (R01) - Z26S4D92AN/AH/BN/BH

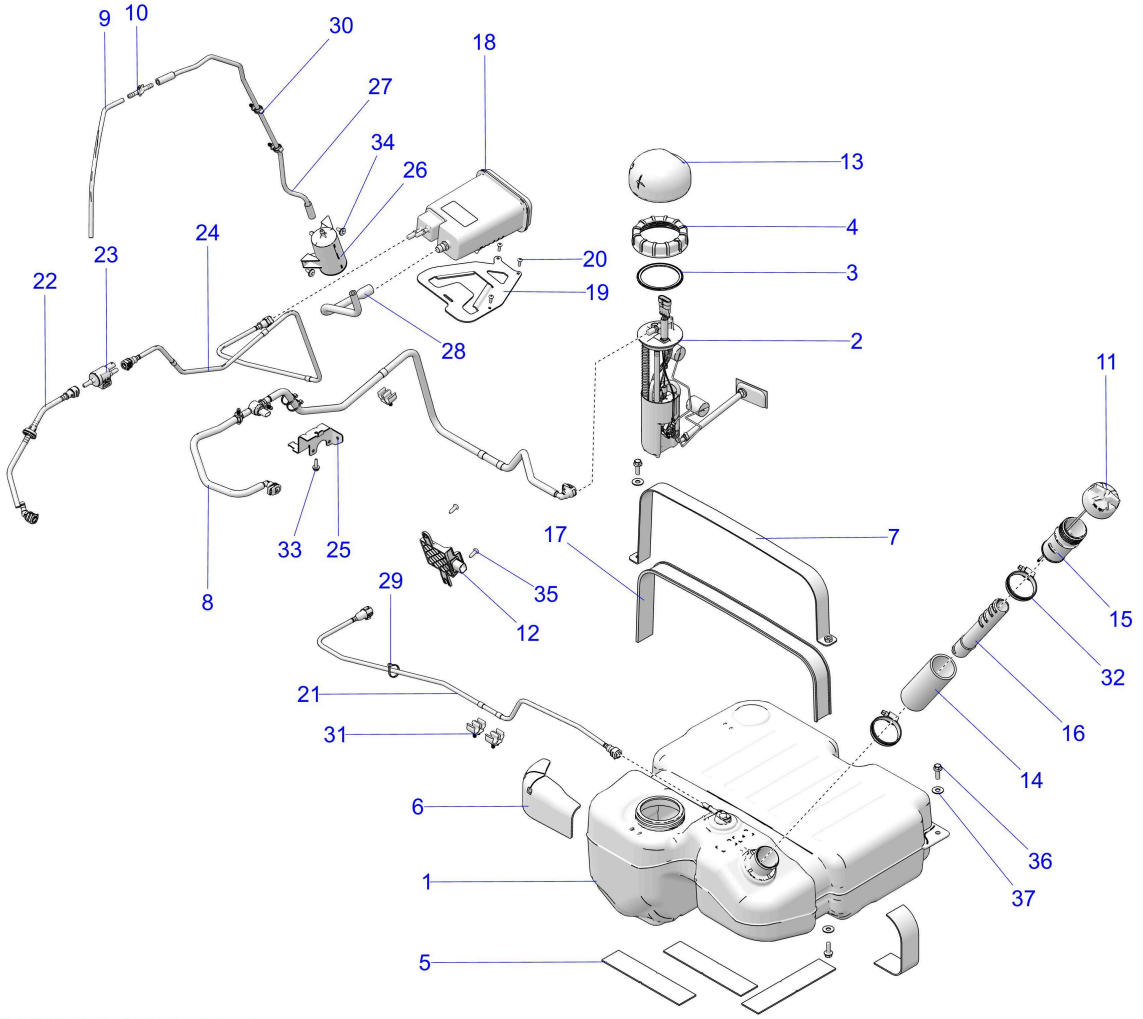

© 2023 Polaris Industries Inc.

C750260

Reference #	*Part#*	*Description*	*Quantity*
	2638045	ASM-FUEL TANK,RZR,T,MP,RV [INCL 1-6][TO 12.15.2025]	1
	2640244	ASM-FUEL TANK,RZR,T,MP [INCL 1-6][FROM 12.15.2025]	1
1	2522691	ASM-FUEL TANK,MP [INCL. 2-4]	1
2	2211787	K-FUEL PUMP,MP [INCL. 3 & 4][TO 12.15.2025]	1
2	2211925	ASM-FUEL PUMP,PRO R [FROM 12.15.2025]	1
3	5413451	GASKET-PFA,RIBBED	1
4	5437138	NUT-MASON JAR	1
5	5814781	PAD-TANK,MOUNT	1
6	5815824	SHIELD-FUEL TANK	1
7	1027698-329	BRKT-STRAP,FUEL TANK,ECOAT	1
8	2522365	ASM-FUEL LINE,SUPPLY	1
9	2522401	ASM-LINE,VENT TERM [INCL. 10]	1
10	5457446	FITTING-VENT LINE,35	1
11	2522651	CAP-GAS TANK,TETHER	1
12	2522698	ASM-FUEL PUMP,CONTROL,MODULE [TO 2.2.2026]	1
12	2523111	ASM-FUEL PUMP,CONTROL,MODULE [FROM 2.2.2026]	1
13	2522746	COVER-PFA,WALBRO [TO 12.15.2025]	1
13	2522805	COVER-PFA,VIPER [FROM 12.15.2025]	1

14	5414709	HOSE, FUEL FILL	1
15	5455329	NECK-FUEL FILL,OUTER	1
16	5466555	TUBE-FUEL FILL,INNER	1
17	5522294	PAD-STRAP,RUBBER	1
18	2521786	CANISTER-ACTIVATED CARBON	1
19	5268296-329	BRKT-MNT CANISTER,BLK	1
20	7661637	RIVET-3/16-.090-.290	3
21	2522079	ASM-LINE,TANK TO CANISTER	1
22	2521959	ASM-LINE,PURGE TO TB	1
23	2521964	VALVE-PURGE	1
24	2522081	ASM-LINE,CANISTER TO PURGE	1
25	5268112-329	BRKT-MNT PURGE VALVE,ECOAT	1
26	2521750	FILTER-CANISTER VENT	1
27	2522430	ASM-LINE,VENT TO CHASSIS	1
28	8450210	HOSE-VENT TO CANISTER	1
29	7080761	CABLE-TIE,10-102MM,WEATH.-RES.	3
30	7081496	CLIP FIR-TREE,DIA6-33MM	4
31	7082454	CLIP-DOUBLE	3
32	7083059	CLAMP-HOSE,25-77 DIA,PLASTIC	2
33	7518529	SCR-M6X1.0X20,HXHD,FLG,TDFM,BK	1
34	7518936	SCR-M6X1X16 TR/TX-M	2
35	7519045	SCR-TX TRUSS-#14X3/4, HI/LO ZBK	2
36	7519243	SCR-HXFL-M8X1.25X25 8.8 ZODP30	4
37	7555976	WASHER-.390X.940X.060,FL-Y	4

Copyright 1996-2026 Polaris Industries U.S.A All rights reserved.